Electric Rider Straddle Stacker

Boyd Smiths Pvt. Ltd.

Advantages:

SAFETY AND PRODUCTIVITY

- AC Motor eliminates replacement of carbon brush.
- Multi-function display with BDI and hour meter.
- Side way battery is easy to maintain.
- Damping cushion for low-noise operation;
- Emergency reversing device in the handle provides higher safety for the whole operation.
- Auto deceleration function makes operation more safely.
- Built-in pressure relief valve protects the trucks from overloads, increases the reliability.
- Braking applied with handle upright and horizontal position, increasing the safety of the truck.
- Emergency power disconnect switch.
- Turtle low speed switch.
- Stepless speed control.

OPTIMUM STRUCTURAL DESIGN:

- Low center of gravity ensures the stable operation.
- Vertical driving wheel ensures convenient maintenance and small turning radius. Water-proof and dust-proof motor structure, keeps the braking and motor more durable and reliable.
- The mast and the frame are dividable and exchangeable.

* phcto shown with model CTDK15-II with free lifting

Model: CTDK10 CTDK12 CTDK15

Straddle legs & adjustable forks

AC

EPS (Option)

1KG=2.205LB 1INCH=25.40MM

Model		CTDK15-Ⅰ	CTDK15-Ⅱ	CTDK10-Ⅲ	CTDK12-Ⅲ	CTDK15-Ⅲ
Load capacity/rated load	**Q(kg)**	**1500**	**1500**	**1000**	**1200**	**1500**
Load centre distance	c(mm)	600	600	600	600	600
Load distance,centre of drive axle to fork	x(mm)	677	677	795	795	795
Fork height, lowered	h_{13}(mm)	70	70	70	70	70
Tyre size,front	mm	ϕ250×70	ϕ250×70	ϕ250×70	ϕ250×70	ϕ250×70
Tyre size rear	mm	ϕ80×84	ϕ80×84	ϕ98×82	ϕ98×82	ϕ98×82
Additional wheels(dimensions)	mm	ϕ150×60	ϕ150×60	ϕ150×60	ϕ150×60	ϕ150×60
Wheels,number front rear(x=driven wheels)		1x+2/4	1x+2/4	1x1/4	1x1/4	1x1/4
Height,mast lowered	h_1(mm)	1805/2055/2205/2305/2120/2280/2480	1805/2055/2205/2305/2120/2280/2480	2145/1895/2145/2295		
Free lift (option 2500~3500mm)	h_2(mm)	1300/1550/1700/1800/1570/1740/1940	1300/1550/1700/1800/1570/1740/1940	~		
Max. lift height	**h_3(mm)**	**2500/3000/3300/3500/4500/5000/5600**	**2500/3000/3300/3500/4500/5000/5600**	**1600/2500/3000/3300**		
Height,mast extended	h_4(mm)	3025/3525/3825/4025/5080/5560/6160	3025/3525/3825/4025/5080/5560/6160	2145/3145/3645/3995		
Height of tiller in drive position mn./max.	h_{14}(mm)	1150/1450	1150/1450	1150/1450		
Overall length	l_1(mm)	2020/2100	2020/2100	1975	1975	2055
Length to face of forks	l_2(mm)	962	962	890	890	970
Overall width	b_1(mm)	1170-1560	1170-1560	1182-1582	1182-1582	1182-1582
Fork dimensions	s/e/l(mm)	35/100/1070(1150)	35/100/1070(1150)	35/100/1070(1150)	35/100/1070(1150)	35/100/1070(1150)
Width overall forks	b_5(mm)	200-800	200-800	200-800	200-800	200-800
Aisle width for pallets 800x1200 lengthways	A_{st}(mm)	2545	2545	2490	2490	2570
Turning radius	W_a(mm)	1695	1695	1625	1625	1705
Travel speed,laden/unladen	Km/h	6.5/6.7	6.5/6.7	6.5/6.7(AC)	6.5/6.7(AC)	6.5/6.7(AC)
Lift speed,laden/unladen	m/s	0-0.12/0-0.19	0.11/0.14	0.06/0.13	0.06/0.13	0.06/0.13
Lowering speed,laden/unladen	m/s	0-0.35/0-0.12	0.12/0.12	0.13/0.10	0.13/0.10	0.13/0.10
Battery voltage,nominal capacity K5	V/Ah	24/300	24/240(24/300)	24/120	24/120	24/200
Battery weight	kg	260	220(260)	90	90	160
Battery dimensions l/w/h	mm	675x254x500	675x254x500(540)	753x178x240	753x178x240	800x254x320
Service weight (with battery)	kg	1260/1285/1300/1310/1360/1380/1400	1200/1225/1240/1250/1300/1320/1340	650/700/730/750	660/710/740/760	780/830/840/850

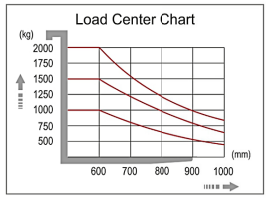

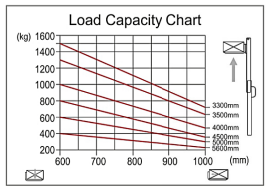
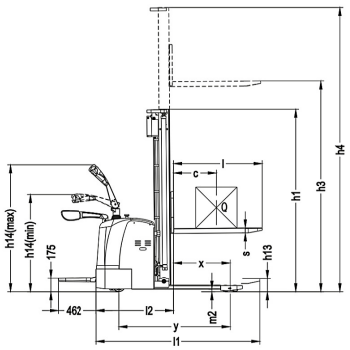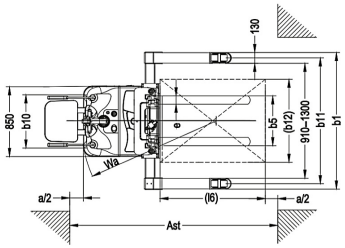
Model	Remarks
CTDK15-Ⅰ	High configuration with proportional valve
CTDK15-Ⅱ	Standard configuration
CTDK15-Ⅲ	Light duty type
CTDK10-Ⅲ/12-Ⅲ	Economy type (DC brushless)